Break out Box/Break Out Box Enhanced 4xx

Supported Vehicles

2008+ Chevy Express
2014+ Chevy Tahoe/ GMC Yukon
2014+ Chevy Silverado/GMC Sierra
2019+ Chevy Silverado Medium Duty
2019+ International CV

2013+ RAM 1500-3500
2015+ Dodge Charger
2016+ Dodge Durango
2015+ Dodge Caravan
2014+ Ram Promaster

2009+ Ford E-Series
2015+ Ford F150
2011+ Ford F250-F750
2013+ Ford Utility (Explorer)
2013+ Ford Sedan (Taurus)
2015+ Ford Transit

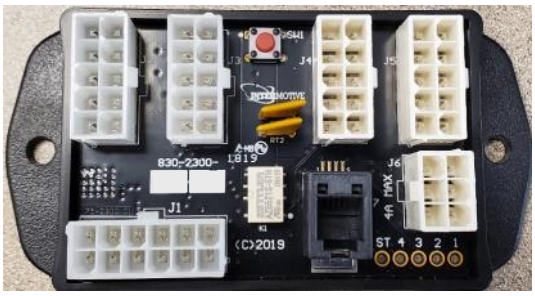

Introduction

The standard Break Out Box (BOB) allows multiple devices to be on the vehicle network with just one connection to the OBDII or Gateway module. It is a simple version of the Break Out Box Enhanced (BOBe). See pages 14-17 for vehicle and harness applications. The vehicle network information sections on pages 18-25 DO NOT apply to the standard BOB.

The Break Out Box Enhanced (BOBe) allows multiple devices to be on the vehicle network with just one connection to the OBDII connector or Gateway module. The BOBe can allow up to 5 different devices to be connected to the network.

The BOBe has STN capability which was designed to minimize compatibility problems when multiple third party devices are connected to a vehicles OBDII connector. It can completely eliminate bandwidth robbing active network requests from the OEM network. It does this by passively acquiring proprietary OEM data from the vehicles network, and then makes this data available to 3rd party devices on a secondary CAN network. This allows 3rd party devices to coexist without causing safety concerns for Intermotive wheelchair lift interlock products.

Eliminating/minimizing active device requests on the vehicle network eliminates vehicle operational concerns that can result from too much CAN traffic on the network. In most cases, no change is required to 3rd party devices. They make their J1979 diagnostic request to the BOBe, which responds just like the PCM would respond.

The BOBe is completely compatible with all Intermotive products. In addition, the BOBe provides a number of proprietary data parameters to third party devices that may not be available in other cases.

See pages 14+15 to determine which Data Link Harness is appropriate to the vehicle.

Installation Instructions

Be sure the vehicle's battery is disconnected before proceeding with installation.

It is the installer's responsibility to route and secure all wiring harnesses where they cannot be damaged by sharp objects, mechanical moving parts and high heat sources. Failure to do so could result in damage to the system or vehicle and create possible safety concerns for the operator and passengers.

It is important to avoid placing the module where it could encounter strong magnetic fields from high current cabling connected to motors, solenoids, etc. Also avoid radio frequency energy from antenna's or inverters next to the module. Finally, avoid high voltage spikes in vehicle wiring by always using diode clamped relays when installing upfitter circuits.

BOBe Module

Remove the lower dash panel below the steering column area and find a suitable location to mount the BOBe module. Locate the module in an area away from any high heat sources (engine heat, heater ducts, etc.). Do not mount the module until all wire harnesses are routed and secure. The last step of the installation is to mount the module.

S-H33AKX Data Link Harness (12-pin connector)

The provided BOBe Data Link harnesses vary from model to model, depending on which chassis the BOBe is being installed on.

1. Locate the vehicles OBDII Data Link Connector. It will be located below the lower left dash panel.
2. Remove the OEM Data Link connector, and mate it to the BOBe Data Link harnesses red connector. Ensure the connection is fully seated and secure with the supplied wire tie.
3. Mount the pass-through connector from the BOBe Data Link Harness in the former location of the vehicle's OBDII connector.
4. Secure the BOBe Data Link harness so that it does not hang below the lower dash panel.



NOTE: Do NOT plug the Data Link harness into the 12-pin connector on the BOBe module. This will be done at a later step.

S-H133AKX Gateway Harness - Ford F150 (2015-2020), Ford F250-F600 w/Sync3 (2017-2022), Ford E-Series (2021-2026)

1. Locate the vehicles Gateway Module (C2431). It will be mounted below the lower left dash panel.
2. Remove the harness behind the Gateway module by pressing the locking tab and pulling outward.
3. Plug the Female side of the InterMotive Gateway Harness into the back of the Gateway module. Ensure the connection is fully seated and secured by the locking tab.
4. Plug the Male side of the InterMotive Data Link Harness into Gateway harness.
5. Secure the BOBe Gateway harness so that it does not hang below the lower dash panel.

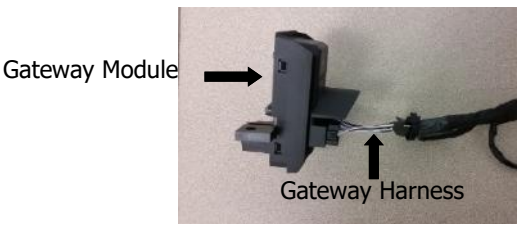



InterMotive Plug and Play Gateway Harness

Installation Instructions Continued

Ford F250-F600 w/Sync4 12" Display (2021-2022): 840-00191
Ford F250-F600 (2023-2025): 840-00298
Ford F150 (2021-2023): 840-00191
Ford F150 (2024): 840-00298

1. Remove the upper centerstack bezel using a plastic trim tool.



1. Remove the RH instrument panel trim using a trim removal tool. The trim starts at the ignition switch and ends at the silver clip. The glove compartment can be opened to better access the back side of the trim.

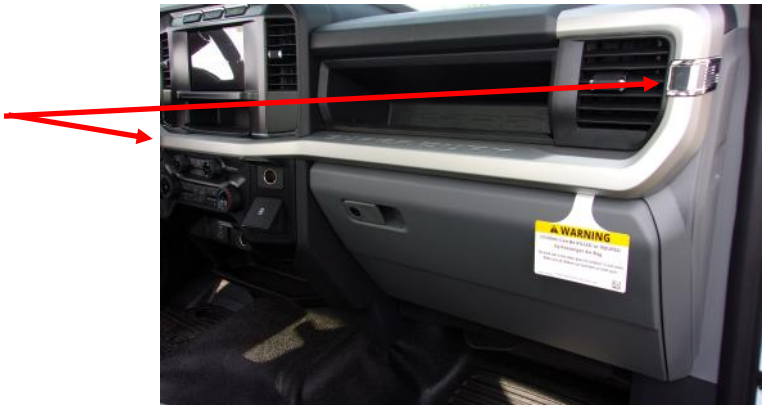

7. Remove the left and right lower centerstack trim panels. Start at the rear of the panel and work towards the dash. Pull the panel towards the rear of the vehicle once the clips are released.

Installation Instructions Continued

8. Remove the (4) 7 mm screws from the lower centerstack trim panel.



10. Grab the centerstack trim panel and pull away from the dash. There is no reason to disconnect any of the connectors.



Installation Instructions Continued

11. Locate the module below the radio and remove any connectors and cable mounts that might interfere with the bracket being rotated.

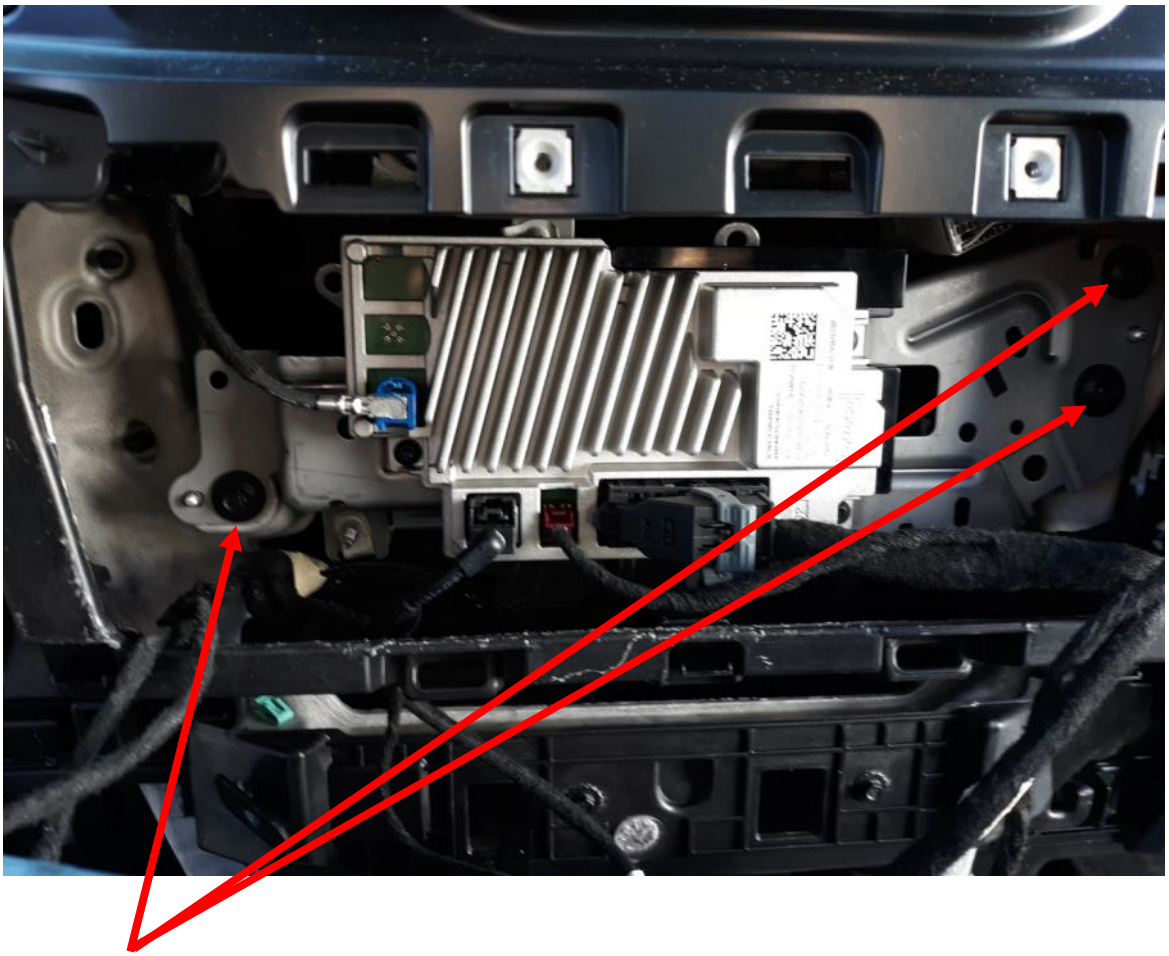

12. Remove the (3) 8 mm screws from the module located below the radio. The Gateway Module is on the backside of the bracket.

Installation Instructions Continued

13. Locate the 26-pin connector and disconnect it from the Gateway Module. Plug the 26-pin connector into the mating connector on the Intermotive harness. Plug the Male connector from the Intermotive harness into the mating connector at the OEM Gateway module.

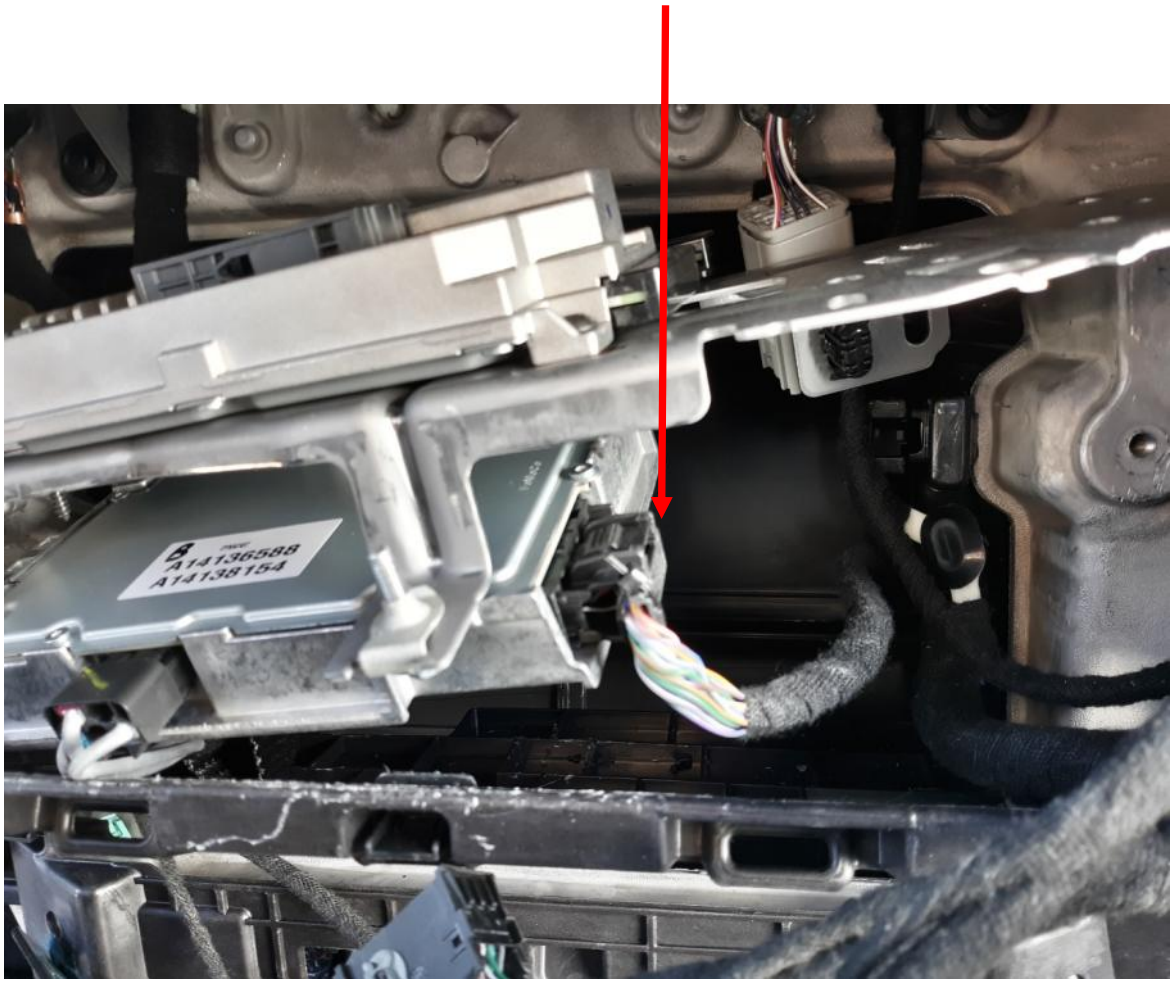

14. Reverse the instructions to reassemble the vehicle.

Data Link Harness 2020-2025 Ford Transit w/ Sync 3: S-H133AKX

1. Locate the vehicles Gateway Module (C2431). It will be mounted below the lower left dash panel behind the OBDII connector.
2. Remove the harness behind the Gateway module by pressing the locking tab and pulling outward.
3. Plug the Female side of the InterMotive Gateway Harness into the back of the Gateway module. Ensure the connection is fully seated and secured by the locking tab.
4. Plug the Male side of the InterMotive Data Link Harness into Gateway harness.
5. Secure the BOBe Gateway harness so that it does not hang below the lower dash panel.

Gateway Module

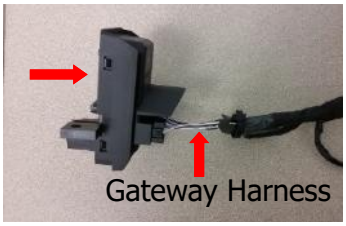



InterMotive Plug and Play Gateway Harness

Data Link Harness 2022-2025 Ford Transit w/ Sync 4: 840-00191

1. Locate the vehicles Gateway Module. It will be mounted behind the glove compartment.
2. Press the tabs inward on the sides of the glove compartment and fully lower it.
3. Remove the 3 nuts securing the Gateway module to the vehicle.
4. Remove the 26-pin connector from the side of the Gateway module and plug into the mating connector on the BOBe harness.
5. Plug the male 26-pin connector from the BOBe harness into the Gateway module.
6. Reinstall the Gateway module and the glove compartment.



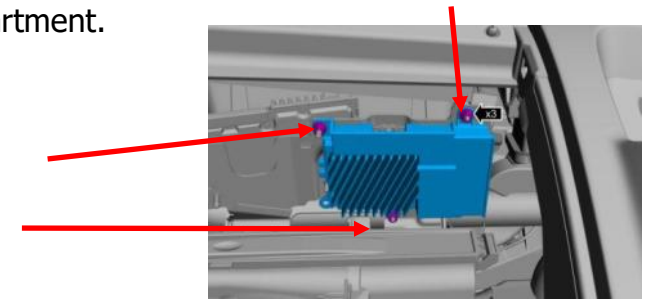

2018 RAM Data Link Harness Installation (S-H133TEX)

The 2018 Ram has a "Gateway" module connected to the OBDII connector. The module is located behind the OEM Radio. The data link harness T's into an 8-pin and 12-pin connector on this gateway module.



Follow the steps below to access the Gateway module.



1. Remove the upper (1) center bezel tray liner.
2. If equipped with the 115 V power outlet (4), remove the lower right (3) center bezel tray liner.



3. Remove the two fasteners (1) to the upper tray.

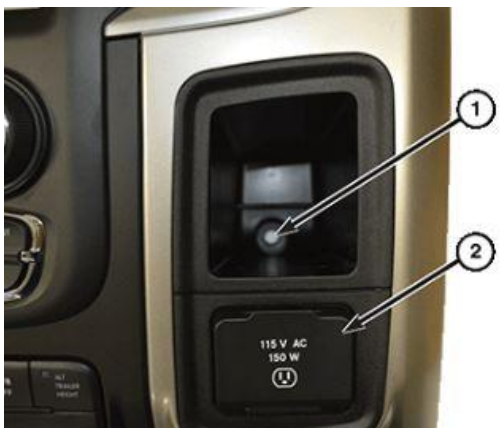

4. If equipped with the 115 V power outlet (2), remove the fastener (1) inside the lower right tray above the outlet.

5. Using a trim removal tool, disengage the retainer clips (2) that secure the instrument panel center bezel to the instrument panel.
6. Disconnect the wire harness connectors (1) and remove the center bezel from the vehicle.

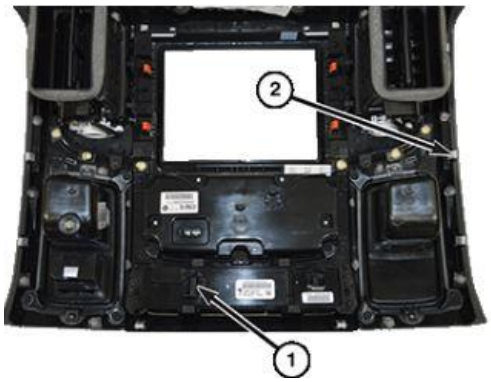

7. Remove the four fasteners (1) securing the Radio Receiver Module (RRM) (2) to the instrument panel.
8. Pull the RRM out far enough to access the back of the RRM.

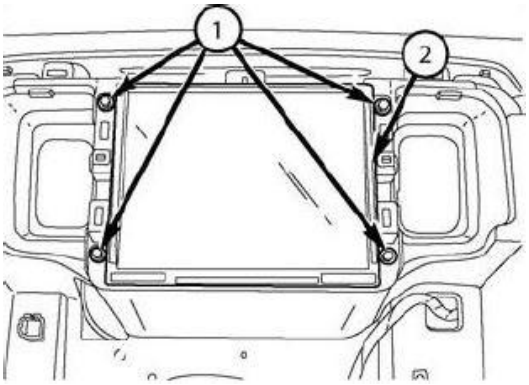

9. Disconnect the antennas (2), and electrical connector (1).
10. If equipped, disconnect the USB connector (3).
11. Remove the RRM from the instrument panel.

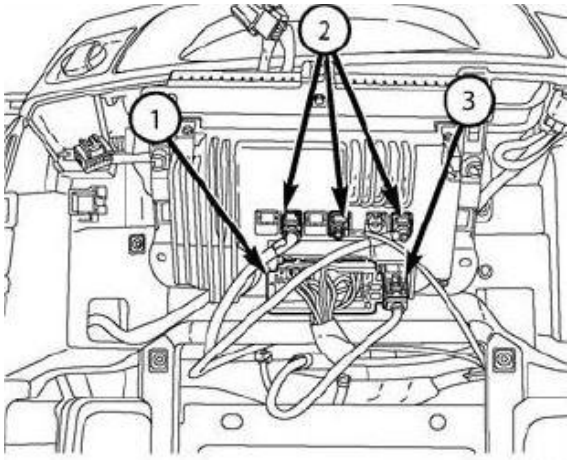

12. Remove the 2 bolts (1).

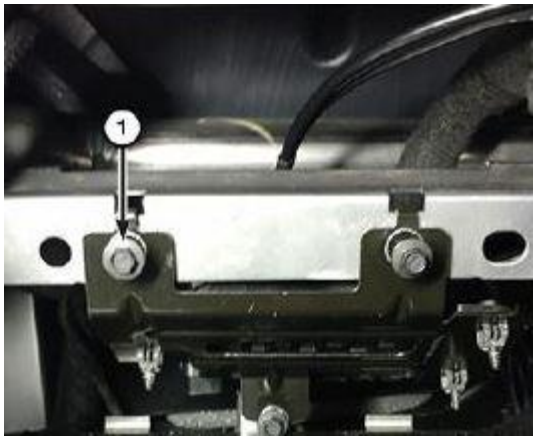

13. Disconnect the Gateway Module wire harness connectors (1).
14. Remove the Gateway Module from the vehicle.

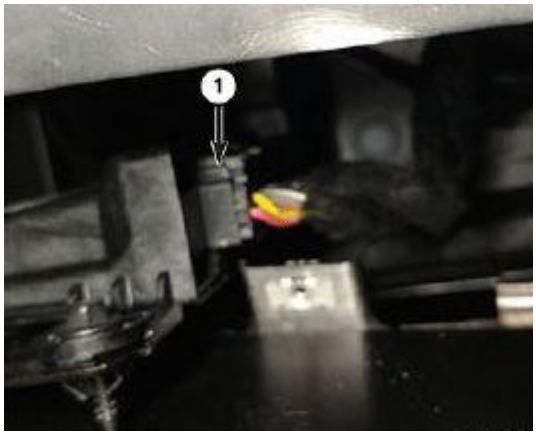

15. Plug in the 12-pin and 8-pin connectors from the Intermotive C-BOBe Data Link harness. Plug the OEM 12-pin and 8-pin connectors into the mating connectors on the C-BOBe Data Link connector.
16. Plug the free end of the Data Link harness into the mating 6-pin connector on the C-BOBe module.

2019-2020 RAM Data Link Harness Insatllation (S-H133TEX)

The 2019-2020 Ram has a "Gateway" module connected to the OBDII connector. The module is located under the instrument panel, as shown in the image. The BOBe data link harness T's into an 8-pin and 12-pin connector on this gateway module.

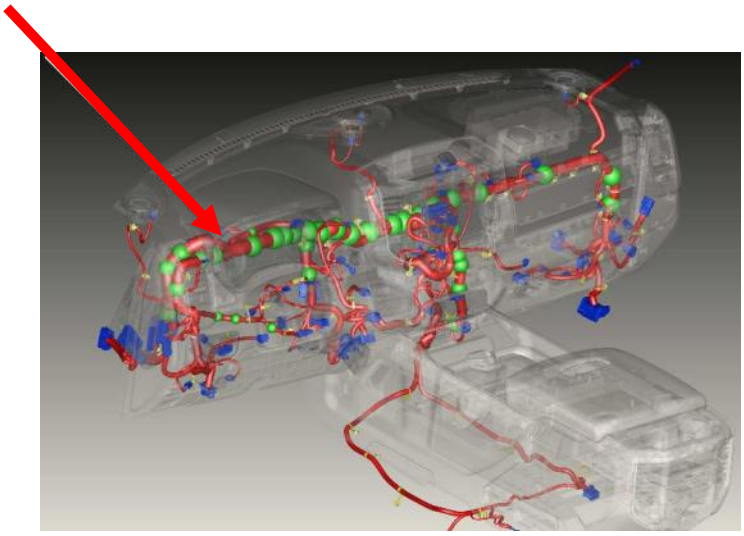

1. Locate the OEM Gateway Module.
2. Disconnect the Gateway Module wire harness connectors.
3. If necessary, remove the Gateway Module from the vehicle.
4. Plug in the 12-pin and 8-pin connectors from the Intermotive C-BOBe Data Link harness. Plug the OEM 12-pin and 8-pin connetors into the mating connectors on the C-BOBe Data Link connector.
5. Plug the free end of the Data Link harness into the mating 6-pin connector on the C-BOBe module.

2018-2020 Dodge Durango Data Link Harness (S-H133TEX)

The 2018-2020 Durango has a "Gateway" module connected to the OBDII connector. The module is located in the underdash in the front passenger area (see Figure 1). The C-BOBe data link harness T's into an 8-pin and 12-pin connector on this gateway module.

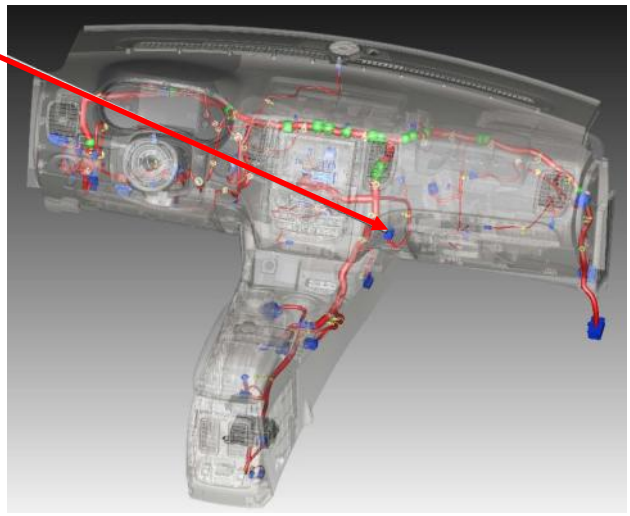

Figure 1

Follow the steps below to access the Gateway module.

1. Remove the two trim pieces shown in Figure 2.

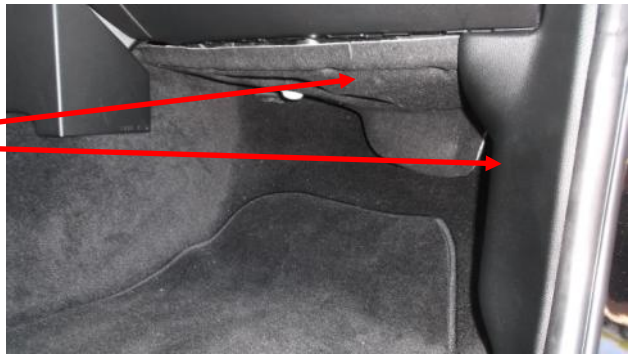

Figure 2

2. Locate the Gateway module in the location shown in Figure 1.
3. Remove the OEM 12 and 8-pin connectors from the Gateway module.



4. Plug in the 12-pin and 8-pin connectors from the Intermotive C-BOBe Data Link harness. Plug the OEM 12-pin and 8-pin connectors into the mating connectors on the Data Link connector.
5. Plug the free end of the Data Link harness into the mating 6-pin connector on the BOBe module.

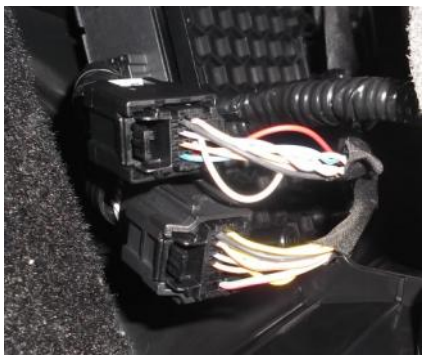

2018-2020 Dodge Charger Data Link Harness (S-H133TEX)

1. Remove the lower dash panel below the steering column.
2. Locate the vehicle's Gateway module located next to the BCM and above the Parking Brake.
3. Remove the 12-pin and 8-pin connectors from the Gateway module and plug in the 12-pin and 8-pin connectors from the Intermotive BOBe Data Link harness. Plug the OEM 12-pin and 8-pin connectors into the mating connectors on the BOBe Data Link harness.
4. Plug the free end of the Data Link harness into the mating 6-pin connector on the BOBe module.

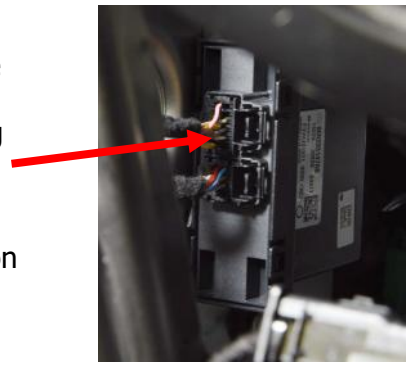

2020-2022 Ram Promaster Data Link Harness (S-H133TEX)

The Promaster has an OEM Gateway module located behind the glovebox. Follow the steps below to access it:

1. Open the glovebox door.
2. Locate the 2 release tabs on the inside of the glovebox (one on the left and one on the right) and drop the door into the full down position.
3. Locate the two fasteners securing the glovebox assembly to the vehicle and remove them.
4. Locate the 4 fasteners on the outside of the glovebox assembly and remove them.
5. Remove the glove box assembly.
6. The Gateway module is located behind the glove box assembly as shown in the picture.
7. Remove the 12-pin and 8-pin connectors from the Gateway module and plug in the 12-pin and 8-pin connectors from the Intermotive BOBe Data Link harness. Plug the OEM 12-pin and 8-pin connectors into the mating connectors on the BOBe Data Link harness.
8. Plug the free end of the 6-pin Data Link harness into the mating 6-pin connector on the 4 foot extension harness (S-H94AX-04). Plug the other end of the extension harness into the mating 6-pin connector on the BOBe module.



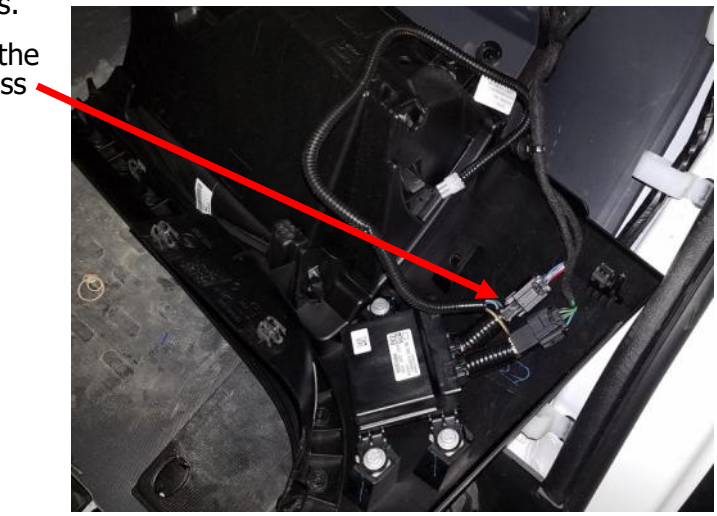

Connector Definition

J1

- Connection point between the vehicle and the module.

J2 & J3

- Data Port for other InterMotive modules.

J4 & J5 (**Same as J2&J3 on standard BOB**)

- Data Port for other InterMotive modules and 3rd Party modules. The power and ground is protected by a 4 AMP resettable fuse.

J6

- OBDII port for 3rd Party modules. The power and ground is protected by a 4 AMP resettable fuse.

J7

- Communication port.

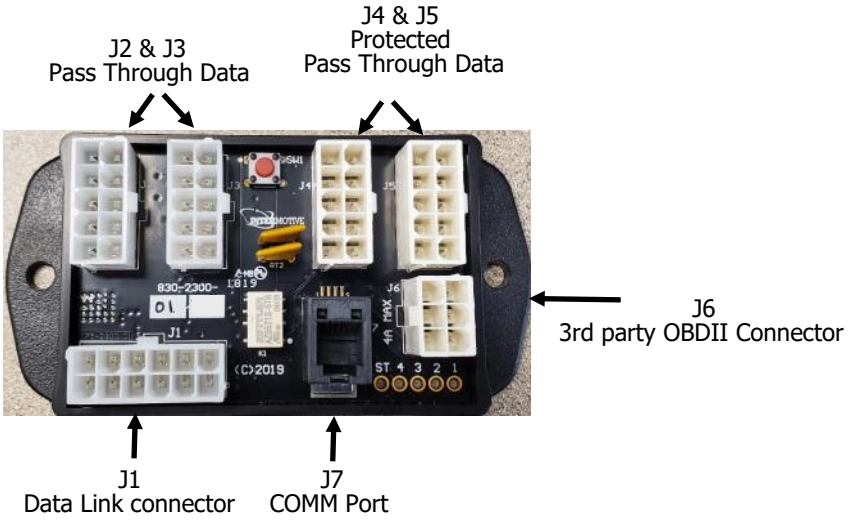

BOB DLC chart		
Ford		Part Number
	E-Series	
	2009-2019	S-H33AKX
	2020-2026	S-H133AKX
	Transit	
	2015-2019	S-H33ATX
	2020-2025 w/ Sync 3	S-H133AKX
	2022-2025 w/ Sync 4 or 12” display	840-00191
	F250-600	
	2011-2016	S-H33AKX
	2017-2022 w/ Sync3	S-H133AKX
	F250-600	
	2021-2022 w/ Sync4 or 12” display	840-00191
	2023-2025	840-00298
	F-150	
	2015-2020	S-H133AKX
	2021-2023 w/ Sync 4 or 12” display	840-00191
	2024-2025	840-00298
	Ford Expedition	
	2015-2017	S-H33AKX
	2018-2020	S-H133AKX
	Ford Interceptor Utility /Explorer	
	2013-2015	S-H33AKX
	2016-2024	S-H133AKX
	2025	840-00298
	Ford Interceptor Sedan	
	2013-2019(EOL)	S-H33AKX
	Ford F-53/F59	
	2019-2022	S-H33AKX
	2023-2025	S-H133AKX
Chevy		
	All Chevy and GM products	S-H33ANX
	Continued on next page	

BOB DLC chart continued		
RAM		
	RAM 1500-5500	
	2013-2017	S-H33ATX
	2018-2020	S-H133TEX
	ProMaster	
	2014-2019	S-H33AMX
	2020-2022	S-H133TEX
Dodge		
	Charger	
	2015-2017	S-H33ATX
	2018-2020	S-H133TEX
	Durango	
	2016-2017	S-H33ATX
	2018-2020	S-H133TEX

BOB Jumper Harness Matrix

The chart below and on the next page show the available harnesses that will be necessary to attach to Intermotive products. The highlighted color represents the color of tape that will be on the harness.

Product	Harness
AFIS-420/422	S-HB07DX
AFIS-506/507	S-HB07DX
AFIS-515/516	S-HB07DX
AFIS-530/532	S-HB07DX
AFIS-706/707	S-HB07DX
AIM-505/506	S-HB33AX
AIM-515/516	S-HB33AX
AIM-605	S-HB33AX
AIM-705	S-HB33AX
A-PRPC-505/550	S-HB33AX
A-PRPC-507/557	S-HB33AX
A-PRPC-509/559	S-HB33AX
BOM-501	S-HB07DX
BOM-503	S-HB07DX
BOM-505	S-HB133DX
BOM-507	S-HB133DX
BOM-536	S-HB133DX
BOM-560	S-HB133DX
BOM-601/620	S-HB33ABX
BOM-701	S-HB33AX
BOM-750	S-HB07DX
BOM-760	S-HB133TDX
B-PRPC-507/557	S-HB133DX
CAM-506/515	S-HB07DX
CAM-510	S-HB07CX
CAM-610	S-HB07DX
CAM-751	S-HB07DX
CCM-401	S-HB07DX
CVC-501/502/516	S-HB33AX
DLM-506	S-HB07DX
DTS507	S-HB33AX
ECL-554	S-HB33PX
ECL-555	S-HB33PX
ECL-654	S-HB33AX
ECO3-507/515	S-HB33AX

Product	Harness
ECO3-601/602	S-HB33AX
ECO-501/507/515	S-HB33AX
ECO-601/602	S-HB33AX
ECO-950	S-HB33AX
EMS-501/506	S-HB33AX
GTWY-505/506/515	S-HB33AX
GTWY-519	S-HB133DX
GTWY-605	S-HB33AX
HL-505/510/515/550	S-HB33AX
HL-605	S-HB33AX
HZF-515	S-HB07DX
IDLE-502	S-HB33AX
IDLE-503	S-HB133DX
IDLE-505/506/507	S-HB133DX
IDLE-516	S-HB33AX
IDLE-555/556	S-HB33PX
IDLE-610/654	S-HB33AX
IDLE-750	S-HB33AX
ILISC-301/320	S-HB07DX
A-ILISC-510/516	S-HB07CX
B-/G-/H-ILISC516	S-HB07DX
ILISC-511/515	S-HB07DX
ILISC-610	S-HB07DX
ILISC-702	S-HB33PX
ILISP-510/515	S-HB07CX
ILISP-610	S-HB07DX
ITC-515/520/550	S-HB33AX
ITC-620	S-HB33AX
ITC-950	S-HB33AX
ITD-707	S-HB07DX
J1939-50x_XR	S-HB142AX
J1939CM-401/405	S-HB142AX
J1939CM-50x/550	S-HB142AX
LOCK-510	S-HB07CX
LOCK-515	S-HB07DX

BOB Jumper Harness Matrix (Continued)

Product	Harness
LOCK-610	S-HB07DX
PIM-601	S-HB33ABX
PIM-701	S-HB33AX
PIM-760	S-HB133TDX
PRPC-605/650	S-HB33AX
PRPC-702/752	S-HB33PX
PRPC-705/750	S-HB33AX
PTM/BTM-505/515	S-HB33AHX
PTM/BTM-506	S-HB33AHX
PTM/BTM-605	S-HB33UX
RSA-550	S-HB33AX
RSA-750/751/752	S-HB33AX
SMM-501	S-HB07DX
SMM-511	S-HB33AX
SMM-601/602	S-HB33ABX
SMM-701/708	S-HB33AX
SMM760	S-HB133TDX
SOS-501/515	S-HB33AX
SOS-502	S-HB33PX
SOS-536	S-HB33AX
SOS-601	S-HB33AX
SOS-701/750	S-HB33AX
SOS-760	S-HB33AX
SSII-	S-HB42FX
UIM4-506	S-HB07DX
UIM4-610	S-HB07DX
UIM4-751	S-HB07DX
UIM-501/516	S-HB33AX
UIM-601	S-HB33AX
UIM-701/750/752/760	S-HB33AX
WIN-752	S-HB33PX
WTSI-505/506/556	S-HB33AX

3rd Party Connectors



S-HB75BX (6-Pin to OBDII)

- The S-HB75BX BOB harness provides a 6-pin connector for interfacing to 3rd party devices. See pinout below. This 6 pin connector can also be plugged into the stub harness which provides the OBDII type connector, if desired.

Pin#1 Red—Battery Voltage	Pin#2 Pink/Black - J1979 CAN High
Pin#3 Dk Green - Vehicle CAN MS High	Pin#4 Gray - Ground
Pin#5 Orange/Black - J1979 CAN Low	Pin#6 Dk Blue - Vehicle CAN MS Low

840-00070 (10-Pin to Gateway)

- The 840-00070 BOB harness provides a 10-pin connector for interfacing to 3rd party devices. See pinout below. This 10 pin connector can also be plugged into the stub harness which provides the Gateway connector, if desired.

Pin#1 Red—Battery Voltage	Pin#2 Yellow - J1979 CAN High 1
Pin#3 Pink - J1939 CAN High 2	Pin#4 Orange - J1939 CAN High 3
Pin#5 Dark Green - Vehicle CAN MS 1	Pin#6 Gray - Ground
Pin#7 Brown - J1979 CAN High 1	Pin#8 Tan - J1939 CAN High 2
Pin#9 Violet - J1939 CAN High 3	Pin#10 Dark Blue - Vehicle CAN MS 1

S-HB75FX (10-Pin to OBDII)

- The S-HB75FX BOB harness provides a 10-pin connector for interfacing to 3rd party devices. See pinout below. This 10 pin connector can also be plugged into the stub harness which provides the OBDII type connector, if desired.

Pin#1 Red—Battery Voltage	Pin#2 Pink/Black - J1979 CAN High 1
Pin#3 N/C	Pin#4 Orange - N/C
Pin#5 Dark Green - Vehicle CAN MS 1	Pin#6 Gray - Ground
Pin#7 Orange/Black - J1979 CAN High 1	Pin#8 N/C
Pin#9 Violet - N/C	Pin#10 Dark Blue - Vehicle CAN MS 1

Operation:

- By default there is always Power (+12V) provided on connectors J4, J5 and J6. If there is a need to remove power to 3rd party devices while in Park there is a special sequence to configure the module.

Removing 3rd Party Power

- Key in Run position, Engine OFF, Transmission in Park
- Put the vehicle in diagnostic mode by pressing the red test button. Status LED should be flashing
- Press Accelerator pedal all the way down
- Cycle service brake until the LEDs on the board flash. About 3 times

LED2 on : Always provide 3rd party power
LED2 off : 3rd party power removed in Park

Active Mode Limitations

The BOBe is intended to be compatible with all Intermotive products. To accomplish this, it limits both the type and frequency of active messages transmitted on the vehicle network. This means that while in active mode not all messages will pass through to the vehicle network, and the rate at which they're passed through is limited. **The maximum rate at which active messages are transmitted on the vehicle network is 40ms. Note that the BOBe will reply immediately to any active request if it has available data, but the data parameters will not update faster than 40ms. See Table below for list of supported services in active mode.**

Diagnostics

Diagnostic Mode: During normal operation, momentarily pressing the red test button on the module puts it into diagnostic mode. Momentarily pressing the button again switches to the next diagnostic page. While in diagnostic mode, the LEDs illuminate in the following manner:

PAGE 1:

- LED1: Send tester present
- LED2: 3rd party Power
- LED3: Reserved
- LED4: TR is not in PARK

PAGE 2:

- LED1: Active response received from vehicle
- LED2: Active request sent to vehicle
- LED3: Request received from third party device
- LED4: Message sent to third party device

PAGE 3:

- LED1: Passive vehicle data received
- LED2: Reserved
- LED3: Reserved
- LED4: Reserved

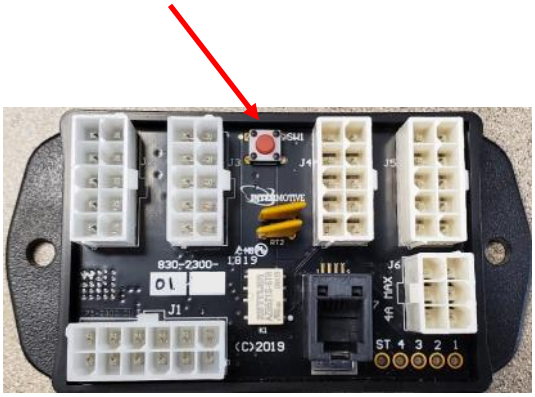

J1979 Service $01 - Request Current Powertrain Diagnostic Data

The description below refers to constructs used in the SAEJ1979 FEB2012 standard. Refer to this standard for further details. Service $01 allows a third party device to request vehicle data. Table 4 lists the PID's available in Passive Mode. All other service $01 PID's are available only in Active Mode. A number of PID's unique to the BOBe are available via service $01. These are listed in Table 4.

The BOBe only allows one PID per service $01 request.

Table 1 - Message Format

Size (Bits)	11	8	8	8	8	8	8	8	8
Field	ID	Data #0	Data #1	Data #2	Data #3	Data #4	Data #5	Data #6	Data #7

Table 2 - Service $01 Request Format

Data Byte	**Parameter Name**	**Hex Value**
#1	Request Powertrain Data Request Service ID	01
#2	PID (See table below, and/or J1979DA)	XX
PID value should be supported by this chassis.		

Table 3 - Service $01 Request Response Format

Data Byte	**Parameter Name**	**Hex Value**
#1	Request Powertrain Data Response Service ID	41
	Data Record of PID:	
#2	PID	XX
#3	Data A	XX
#4	Data B	XX
#5	Data C	XX
#6	Data D	XX
Data B-D depend on selected PID value.		

Table 4 - Service $01 PID's available in Passive Mode

PID	Description	Conversion
0x05	Engine Coolant Temperature (ECT)	A-40, Degrees C
0x0C	Engine Speed (RPM)	((A*256)+B)/4
0x0D	Vehicle Speed (VSS)	1 bit = 1 kph
0x11	Throttle Position (TP)	A*100/255, %
0x2F	Fuel Level (FLI)	A*100/255, %
0xE1	Park Brake (PB), Service Brake (SB), A/C (AC), ABS Event (ABS), Engine Oil Pressure Lamp (EOP), Malfunction Indicator Lamp (MIL), General Purpose Inputs (IN1/IN2)	**Data A:** PB - On=$1x, Off=$0x, Unknown=$3x SB - On=$x1, Off=$x0, Unknown=$x3 **Data B:** AC - On=$1x, Off=$0x, Unknown=$3x ABS - On=$x1, Off=$x0, Unknown=$x3 **Data C:** MIL - On=$1x, Off=$0x, Unknown=$3x EOP - On=$x1, Off=$x0, Unknown=$x3 **Data D:** IN1 - Active=$1x, Inactive=$0x, Unknown=$3x IN2 - Active=$x1, Inactive=$x0, Unknown=$x3
0xE2	Transmission Range (TR), Key Position (KEY), Headlights (LIGHTS)	**Data A:** TR - 0=Park, 1=Reverse, 2=Neutral, 3=Drive, 7=Unknown **Data B:** KEY - 0 = Off, 1=Accessory, 2=On, 3=Crank, 7=Unknown **Data C:** LIGHTS - DRL On=$1x, DRL Off=$0x, DRL Unknown=$3x Park Lamps On=$x1, Park Lamps Off=$x0, Park Lamps Unknown=$x3 **Data D:** LIGHTS - Low Beams On=$1x, Low Beams Off=$0x, Low Beams Unknown=$3x High Beams On=$x1, Hi Beams Off=$x0, High Beams Unknown=$x3
0xE3	Transmission Fluid Temperature (TFT)	A-40, Degrees C; $FF = Unknown
0xE4	Ambient Air Temperature (AAT)	A-40, Degrees C; $FF = Unknown

Table 4 - Service $01 PID's available in Passive Mode (Continued)

	Door Switch Status (DOORS), Door Lock Status (LOCKS), Turn Signal Status (TSIG)	**Data A:** DOORS - Front Driver Open=$1x, Front Driver Closed=$0x, Front Driver Unknown=$3x Front Passenger Open=$x1, Front Passenger Closed=$x0, Front Passenger Unknown=$x3 **Data B:** DOORS - Rear Driver Open=$1x, Rear Driver Closed=$0x, Rear Driver Unknown=$3x Rear Passenger Open=$x4, Rear Passenger Open=$x0, Rear Passenger Unknown=$xC Rear Open=$x1,Rear Closed=$x0, Rear Unknown=$x3 **Data C:** LOCKS - All Locked=$x1, All Unlocked=$x2, Driver Unlocked=$x4, Unknown=$x7 **Data D:** TSIG - Left On=$1x, Left Off=$0x, Left Unknown=$3x Right On=$4x, Right Off=$0x, Right Unknown=$Cx Hazards On=$x1, Hazards Off=$x0, Hazards Unknown=$x3
0xE6	Seat Switch Status (SEATS), Seat Belt Status (BELTS), Audio Mute Status (MUTE)	**Data A:** SEAT - Driver Occupied=$1x, Driver Unoccupied=$0x, Driver Unknown=$3x Passenger Occupied=$x1, Passenger Unoccupied=$x0, Passenger Unknown=$x3 **Data B:** BELT - Driver Buckled=$1x, Driver Unbuckled=$0x, Driver Unknown=$3x Passenger Buckled=$x1, Passenger Unbuckled=$x0, Passenger Unknown=$x3 **Data C:** MUTE - Mute On=$x1, Mute Off=$x0, Mute Unknown=$x3
0xE7	Odometer (ODO)*	1 km per bit. 32-bit value, A is MSB, D is LSB

* Only available in Passive mode in some applications.

J1979 Service $03 - Request Emission-Related Diagnostic Trouble Codes

The description below refers to constructs used in the SAEJ1979 FEB2012 Standard. Refer to this standard for further details. Service $03 allows a third party device to request Diagnostic Trouble Codes from all modules on a vehicle. **This service is only available in Active Messaging Mode**.

When the BOBe receives a Service $03 request, it passes it through to the vehicle network. Any responses from vehicle modules are passed back through to the third party device as they are received.

The third party device should use the message described in Table 5 to request trouble codes.

Table 5 - Service $03 Request Trouble Codes (refer to Table 1 for message format)

Data Byte	Parameter Name	Hex Value
#1	Request Powertrain Data Request Service ID	03

J1979 Service $09 - Request Vehicle Information

The description below refers to constructs used in the SAE J1979 FEB2012 and ISO 15765 standards. Refer to these for further details. Service $09 allows a third party device to request vehicle-specific vehicle information. **The SNT720 only supports a VIN request, described below. This works in both Passive and Active Modes.** The VIN request using service $09 makes use of multiple frame communication, as described in ISO 15765. The message flow is outlined below, but refer to ISO 15765 for further details regarding multiple frame communications

Table 6 - Service $09 Request VIN

Data Byte	Parameter Name	Hex Value
#1	Request Vehicle Information Request Service ID	09
#2	Info Type - VIN	02

Table 7 - Service $09 Response 1 from BOBe

Data Byte	Parameter Name	Hex Value
#0	Multiple Message Communication: First Frame	10
#1	Data Length	14
#2	Request Vehicle Information Response Service ID	49
#3	Info Type - VIN	02
#4	Number of Data Items	01
#5	VIN Character 1	XX
#6	VIN Character 2	XX
#7	VIN Character 3	XX

Table 8 - Service $09 Response 2 from BOBe

Data Byte	Parameter Name	Hex Value
#0	Consecutive Frame: Sequence Number 1	21
#1	VIN Character 4	XX
#2	VIN Character 5	XX
#3	VIN Character 6	XX
#4	VIN Character 7	XX
#5	VIN Character 8	XX
#6	VIN Character 9	XX
#7	VIN Character 10	XX

Table 9 - Service $09 Response 3 from BOBe

Data Byte	Parameter Name	Hex Value
#0	Consecutive Frame: Sequence Number 2	22
#1	VIN Character 11	XX
#2	VIN Character 12	XX
#3	VIN Character 13	XX
#4	VIN Character 14	XX
#5	VIN Character 15	XX
#6	VIN Character 16	XX
#7	VIN Character 17	XX

Proprietary Service $22 - Read Parameter by identifier

Some vehicles support service $22, which is used to request proprietary vehicle data. **This service is only available in Active Messaging Mode.**

When the BOBe receives a service $22 request addressed to a module ID greater than $700, it passes it through to the vehicle network. Any responses from vehicle modules are passed back through to the third party device as they are received.

Data Link Part Numbers:

2009-2019 Ford E-Series	S-H33AKX
2020-2026 Ford E-Series	S-H133AKX
2015-2019 Ford Transit	S-H33ATX
2020-2025 Ford Transit w/ Sync 3	S-H133AKX
2022-2025 Ford Transit w/ Sync 4 or 12" display	840-00191
2011-2016 Ford F250-550	S-H33AKX
2017-2020 Ford F250-550	S-H133AKX
2021-2022 Ford F250-F600	S-H133AKX
2023-2025 Ford F250-F600	840-00298
2015-2020 Ford F150	S-H133AKX
2021-2022 Ford F150 w/ Sync 4 or 12" display	840-00191
2024-2025 Ford F150	840-00298
2015-2017 Ford Expedition	S-H33AKX
2018-2020 Ford Expedition	S-H133AKX
2013-2015 Ford Explorer/Utility	S-H33AKX
2016-2024 Ford Explorer/Utility	S-H133AKX
2025 Ford Explorer/Utility	840-00298
2013-2019 Ford Interceptor Sedan	S-H33AKX
2019-2022 Ford F-53/59	S-H33AKX
2023-2025 Ford F-53/59	S-H133AKX
All Chevy and GM Products	S-H33ANX
2013-2017 Ram 1500-5500	S-H33ATX
2018-2020 Ram 1500-5500	S-H133TEX
2014-2019 Ram Promaster	S-H33AMX
2020-2022 Ram Promaster	S-H133TEX
2015-2017 Dodge Charger	S-H33ATX
2018-2020 Dodge Charger	S-H133TEX
2015-2019 Dodge Caravan	S-H33ATX
2016-2017 Dodge Durango	S-H33ATX
2018-2019 Dodge Durango	S-H133TEX

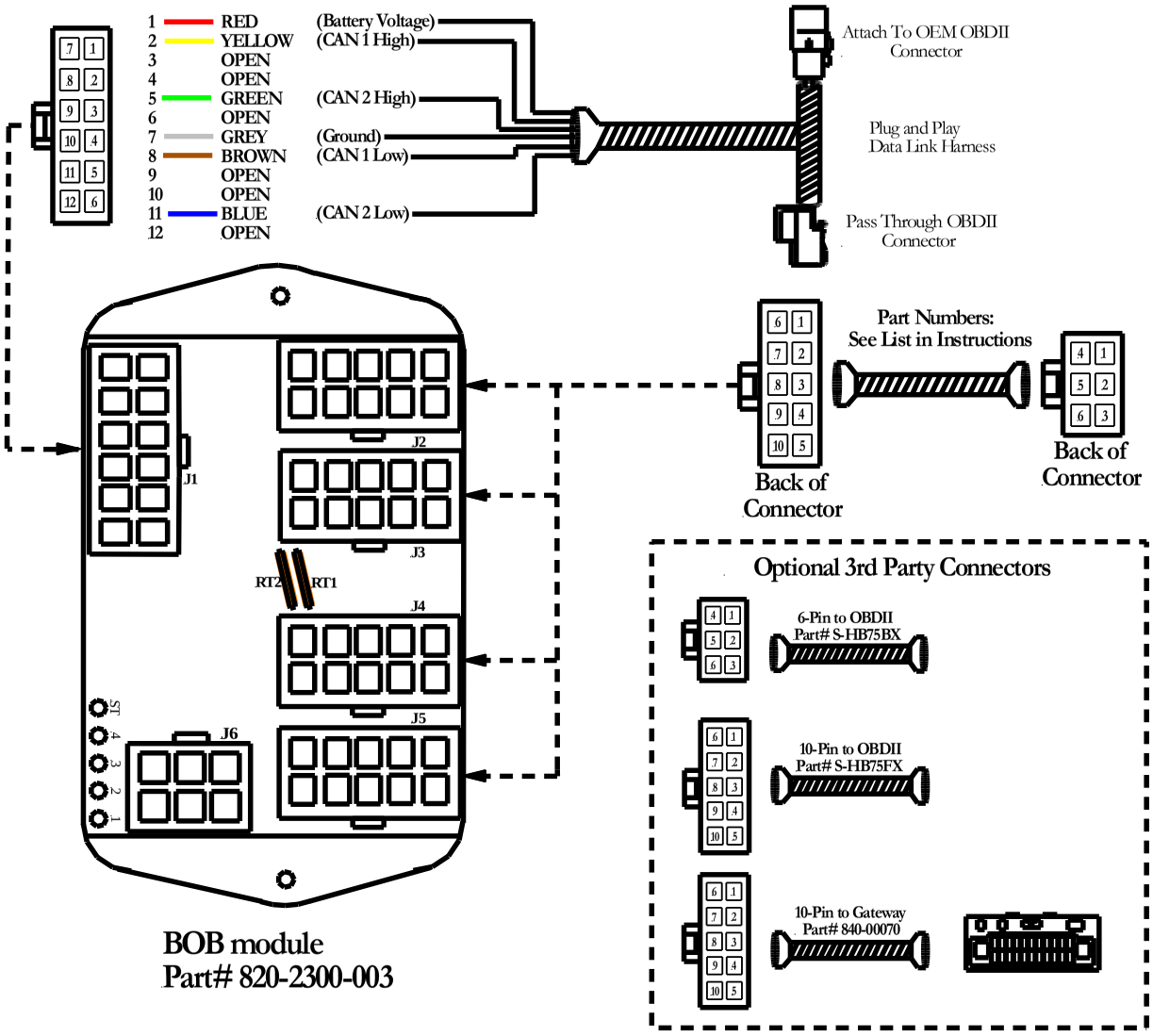

Submit product registration at www.intermotive.net

If the BOBe fails any step in the Post Installation Test, review the installation instructions and check all connections. If necessary, call

InterMotive technical support @ (530) 823-1048.

Data Link Part Numbers:

2009-2019 Ford E-Series	S-H33AKX
2020-2026 Ford E-Series	S-H133AKX
2015-2019 Ford Transit	S-H33ATX
2020-2025 Ford Transit w/ Sync 3	S-H133AKX
2022-2025 Ford Transit w/ Sync 4 or 12" display	840-00191
2011-2016 Ford F250-550	S-H33AKX
2017-2020 Ford F250-550	S-H133AKX
2021-2022 Ford F250-F600	S-H133AKX
2023-2025 Ford F250-F600	840-00298
2015-2020 Ford F150	S-H133AKX
2021-2022 Ford F150 w/ Sync 4 or 12" display	840-00191
2024-2025 Ford F150	840-00298
2015-2017 Ford Expedition	S-H33AKX
2018-2020 Ford Expedition	S-H133AKX
2013-2015 Ford Explorer/Utility	S-H33AKX
2016-2024 Ford Explorer/Utility	S-H133AKX
2025 Ford Explorer/Utility	840-00298
2013-2019 Ford Interceptor Sedan	S-H33AKX
2019-2022 Ford F-53/59	S-H33AKX
2023-2025 Ford F-53/59	S-H133AKX
All Chevy and GM Products	S-H33ANX
2013-2017 Ram 1500-5500	S-H33ATX
2018-2020 Ram 1500-5500	S-H133TEX
2014-2019 Ram Promaster	S-H33AMX
2020-2022 Ram Promaster	S-H133TEX
2015-2017 Dodge Charger	S-H33ATX
2018-2020 Dodge Charger	S-H133TEX
2015-2019 Dodge Caravan	S-H33ATX
2016-2017 Dodge Durango	S-H33ATX
2018-2019 Dodge Durango	S-H133TEX

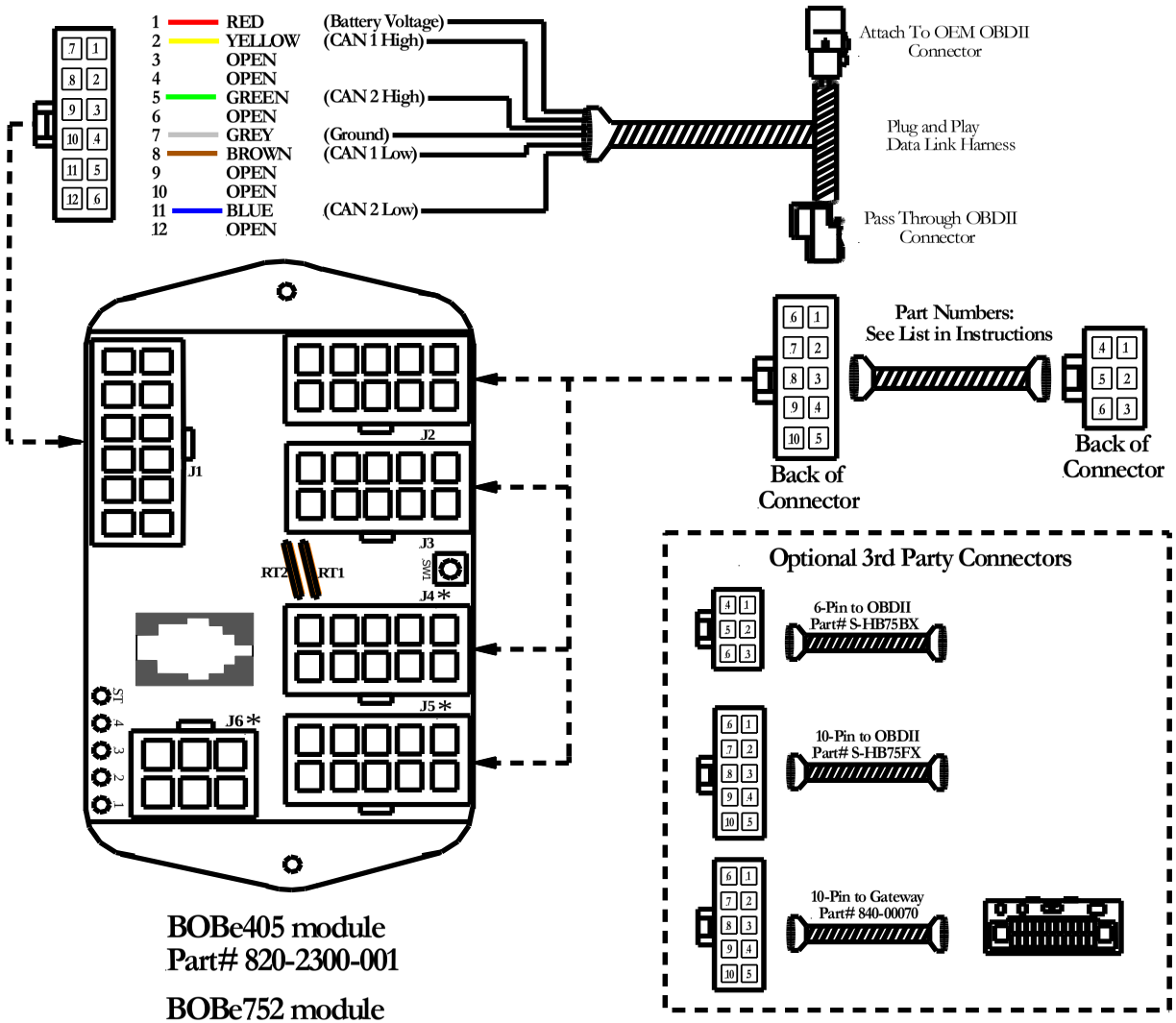

* J4, J5, and J6 Output Protected Pass-Through STN Data

BOBe405 module
Part# 820-2300-001

BOBe752 module
Part# 820-2300-004

Submit product registration at www.intermotive.net

If the BOBe fails any step in the Post Installation Test, review the installation instructions and check all connections. If necessary, call

InterMotive technical support @ (530) 823-1048.