An ISO 9001:2000 Registered Company

InterLock (LOCK501-GD)
Installation Instructions

Ford Econoline
2005 - 2008

To aid in installation, first gain access to the connection points. Remove the lower dash panel below the steering column and the engine cover. Also, gain access to the lift power switch and the lift door switch circuits. These are usually accessible in the front control panel.

InterLock Harness

Position the InterLock harness such that the 12- pin connector is in position to be installed into the control module. **The connector should not be installed into the module until the InterLock harness is fully installed. All connections must be made with ignition power OFF.** The connection points to be made for the installation of the InterLock harness are listed below.

Park Circuits

B or T Transmission Code only (Transmission code is located on the vehicle certification label). (2005-2008 Models)

Locate the Ford OEM Blunt cut wire for "Park". This wire is located under the hood in the cowl area. On gas engines, it is a White/Orange wire labeled "Park Out". On diesel engines, it is a YE/WH wire labeled "TRO_P". Verify that this wire provides ground in Park only. The two Green wires from the InterLock harness will be run through the vehicle bulkhead. Drill a hole in the bulkhead and feed the two Green wires into the engine compartment. Trim wires to proper length and connect both green wires to the Ford OEM Blunt cut wire for "Park" by soldering the wires and sealing the connection with heat shrink tubing. Secure the harness with wire ties.

A, F, or Q Transmission Code (2005-2006 Models)

These applications will not have a Ford OEM Blunt cut wire for "Park". The two Green wires from the InterLock harness will need to be spliced into two circuits in the Ford Black 16-pin connector located above the transmission bell housing. Drill a hole in the bulkhead flange for the engine cover and feed the two Green wires through the hole from the engine compartment. Splice the Green wires into Circuit 1145 (Pin 10, LB/BK) and Circuit 1146 (Pin 11, LG/RD) near the 16-pin Ford Black connector located above the transmission bell housing by soldering the wires and sealing the connection with heat shrink tubing. Either Green wire can be spliced into either OEM circuit. Secure the harness with wire ties.

Q Transmission Code (2007-2008 Model)

These applications will not have a Ford OEM Blunt cut wire for "Park". The two Green wires from the InterLock harness will need to be spliced into two circuits in the Ford Black 10-pin connector located above the transmission bell housing. Drill a hole in the bulkhead flange for the engine cover and feed the two Green wires through the hole from the engine compartment. Splice the Green wires into Circuit 1145 (Pin 10, LB/BK) and Circuit 1146 (Pin 11, LG/RD) near the 10-pin Ford Black connector located above the transmission bell housing by soldering the wires and sealing the connection with heat shrink tubing. Either Green wire can be spliced into either OEM circuit. Secure the harness with wire ties.

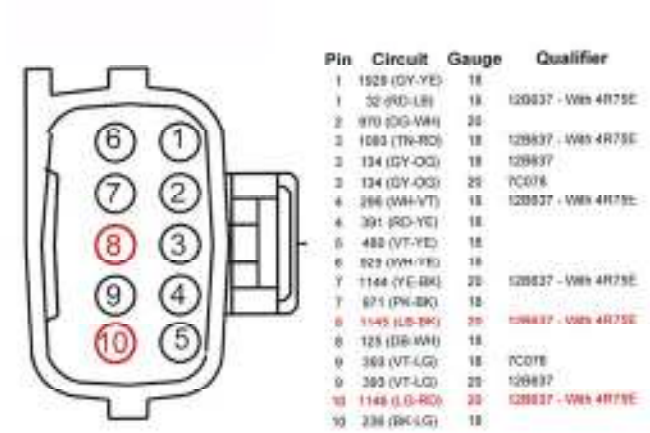

Shift Lock Circuit

Locate the Ford shift lock solenoid on the steering column and disconnect the Black 3-pin connector. Be careful not to break the plastic tab on the connector. Insert the Black female 3-pin connector from the InterLock harness into the shift lock solenoid. Ensure that it is fully seated into the solenoid. Insert the Black male 3-pin connector from the InterLock harness into the connector that was originally installed in the shift lock solenoid. **It is imperative that these connectors mate with the tabs on the same side. Use the small wire tie to secure the two tabs together. These connectors must not be allowed to separate!**

Lift Power Circuit

Locate the lift power switch. Disconnect the circuit from the switch that goes to the lift relay. **Note: this must be a power switch, not a grounding switch.** Connect this circuit to the Orange wire from the InterLock harness with a spade terminal. Connect the Yellow wire from the InterLock harness to the power switch using a spade terminal. The lift power circuit must only activate the lift power relay/solenoid and must not draw more than 7.0 Amps. **Do not power any other loads (ie: lights, motors, etc.) off this circuit**.

Parking Brake Circuit

Disconnect the Black 2-pin Ford connector from the Parking Brake. Plug the female side of the connector from the Brown wire on the InterLock harness to the parking brake. Install the male side of the connector on the Brown wire to the female connector in the Ford harness.

Lift Door Circuit

Note: the door switch must provide a ground with the door open. A switch that provides power with the door open will not operate correctly. This switch must be dedicated to the lift door and not shared with any other doors. Locate the lift door switch circuit. Connect the Gray wire from the InterLock harness to this wire by stripping the insulation, soldering, and taping.

Park Output Circuit

This is an optional circuit that provides a ground in Park gear only. This circuit is useful if the operator wishes to activate or deactivate an accessory only in Park (ie: power operated front door). Attach the White wire from the InterLock harness to the ground side of the accessory. If this option is not desired, cut the wire at the 12-pin connector and discard the wire. **Note: This output can only carry low current loads such as a relay primary coil. Higher loads can cause damage to the control module. The current of the load must first be determined and can not exceed 500 milliamps continuous load. This wire must not be attached directly to power without a load, or damage to the control module will result.**

Finally, snap the 12-pin connector of the InterLock wire harness into the control module. Make sure the connector is fully seated. Secure the control module on the metal support bracket behind the lower dash panel using 2-sided foam tape or wire ties.

Check for proper operation (see Post-Installation Instructions)

An ISO 9001:2000 Registered Company

Post Installation Instructions
InterLock 501 / 502 / 601 / 602

Upon completion of installation of the InterLock by InterMotive, the following procedure **MUST BE PERFORMED TO VERIFY PROPER INTERLOCK INSTALLATION AND FUNCTION:**

- Set Park Brake, place transmission to Park position, close lift door, and turn Lift Power Switch to the off position. Turn ignition to the "Run" position. Do not start vehicle.
- Place foot on service brake and attempt to shift out of Park. Shift lever should not be allowed to shift out of the Park position. If shift lever is allowed to move, check connections at all connection points.
- Release Park Brake. Remove foot from service brake and attempt to shift out of Park. Shift lever should not be allowed to shift out of the Park position. If shift lever is allowed to move, check connections at all connection points.
- With Park Brake still released, place foot on service brake and attempt to shift out of park. Shift lever should now be allowed to shift out of Park position. If shift lever is not allowed to move, check connections at all connection points.
- Place shift lever back to the Park position. With Park Brake still released, have an assistant open the lift door. Place foot on service brake and attempt to shift out of Park. Shift lever should not be allowed to shift out of "Park" position. If shift lever is allowed to move, check connections at all connection points.
- Set Park Brake. Turn on Lift Power Switch. Have assistant verify lift operation. Lift should now be operational.
- Stow the lift, close lift door and shift out of Park. Reopen lift door and have assistant attempt to operate the lift in all ranges except Park. The lift must not operate in any of these ranges. If it does, check wiring to the vehicle Park circuit(s).
- Release Park Brake. Have assistant attempt to operate lift. Lift should not be operational. If lift operates, check connections at all connection points.
- Reapply Park Brake, turn off lift power switch. Have assistant attempt to operate lift. Lift must not operate. If lift operates, check connections and condition of lift switch.
- If any irregular operational issues persist, contact InterMotive at 530-346-1801 for technical assistance.

An ISO 9001:2000 Registered Company

Interlock by InterMotive – Operating Instructions
LOCK501-GD / LOCK502-GD / LOCK601-GD / LOCK 602-GD

The Interlock by InterMotive System is a microprocessor driven system for controlling wheelchair lift operation. Lift operation will only be allowed when all of the following conditions are met:

1. The vehicle is in "Park"
2. The parking brake is applied.
3. The vehicle ignition is on.
4. The lift power switch is on.
5. The lift door is open.

The Interlock by InterMotive System also will not allow the vehicle to be shifted out of park if the lift door is open. As an added feature, it also will not allow the vehicle to be shifted out of park anytime the parking brake is applied. This feature eliminates excessive parking brake wear due to driving with the parking brake applied.

986 So. Canyon Way
Colfax, CA 95713

Phone: 530-346-1801
Fax: 530-346-1812
11/28/2007 Rev. B

REVISIONS	
DATE :	CHANGE :

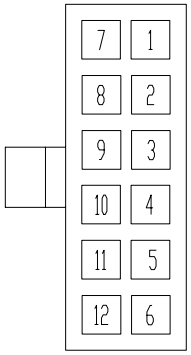

LOCK501-GD
12 PIN
CONNECTOR

(VIEW FROM BACK
OF CONNECTOR)

Pin	Wire	Function
7	GREEN	PARK-B1 INPUT - ATTACH TO TRANSMISSION PARK SIGNAL(S)
8	GREEN	PARK-B2 INPUT - ATTACH TO TRANSMISSION PARK SIGNAL(S)
1	RED	POWER INPUT - ATTACH TO SHIFT-LOCK SOLENOID (BLACK 3 PIN T-HARNESS CONNECTOR)
2	BLACK	GROUND INPUT - ATTACH TO SHIFT-LOCK SOLENOID (BLACK 3 PIN T-HARNESS CONNECTOR)
3	BLUE	SHIFT INTERLOCK OUTPUT - ATTACH TO SHIFT-LOCK SOLENOID (BLACK 3 PIN T-HARNESS CONNECTOR)
4	WHITE	SHIFT INTERLOCK INPUT - ATTACH TO SHIFT-LOCK SOLENOID (BLACK 3 PIN T-HARNESS CONNECTOR)
5	YELLOW	LIFT POWER INPUT - ATTACH TO OUTPUT SIDE OF LIFT POWER SWITCH
6	ORANGE	LIFT POWER OUTPUT - ATTACH TO LIFT POWER RELAY
12	GRAY	LIFT DOOR INPUT - ATTACH TO LIFT DOOR SWITCH INPUT (GROUND SIGNAL)
11	BROWN	PARK BRAKE INPUT - ATTACH TO PARK BRAKE SWITCH
10	WHITE	OPTIONAL PARK-ONLY OUTPUT (GROUND SIGNAL)

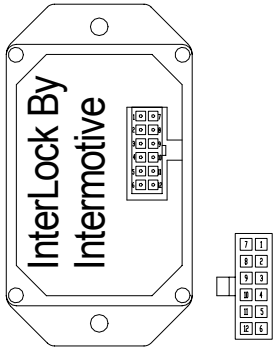

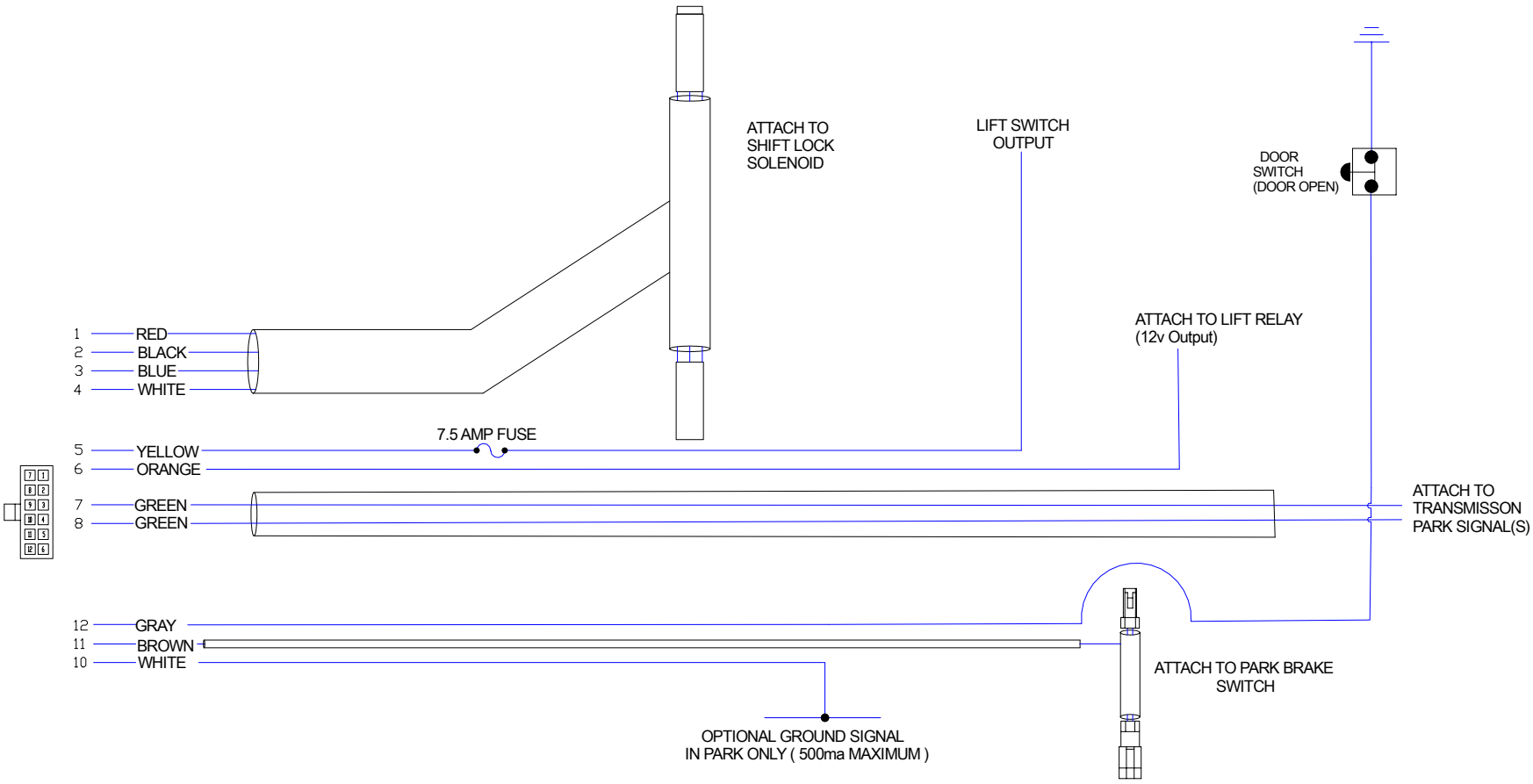

INTERMOTIVE VEHICLE CONTROLS	PRODUCT : INTERLOCK BY INTERMOTIVE	DRAWN BY: BRUCE HODGE	PART NO: LOCK501-GD
		DATE DRAWN : 5/15/06	CHECK BY : ED PROKOPIK / DATE CHECKED : 5/25/06